C.I.P.	270 Win.	TAB.	I
		Date	84-06-14
	Country of Origin: US	Revision	02-05-15

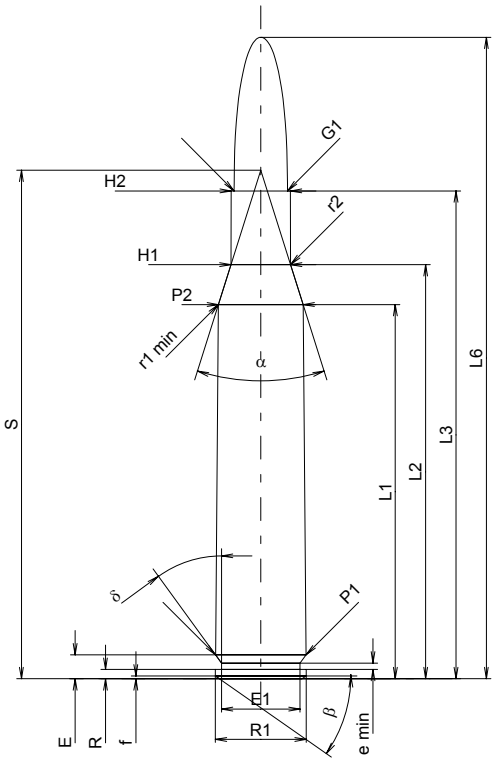

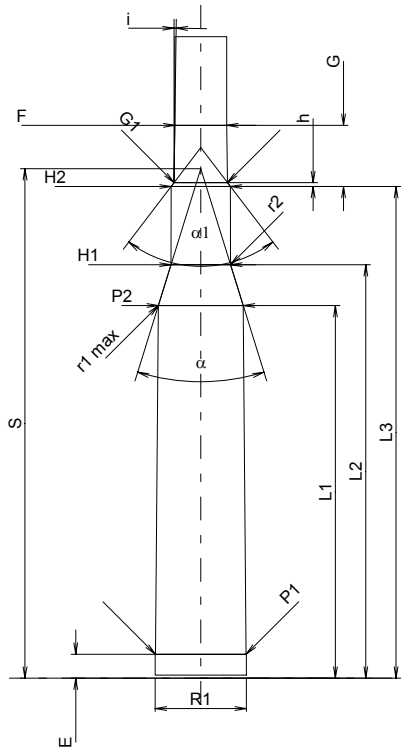

Scale 1:1

CARTRIDGE MAXI

Lengths

L1 1)	=	49.49	-0.20
L2 1)	=	54.77	-0.20
L3 1)	=	64.52	
L4	=		
L5	=		
L6	=	84.84	

Case Head

R	=	1.24	
R1	=	12.01	
R3	=		
E	=	3.16	
E1	=	10.39	
e min	=	0.84	
δ	=	36°	
f	=	0.38	
β	=	35°	

Powder Chamber

P1	=	11.96	
P2 1)*	=	11.20	-0.20

Junction Cone

α *	=	35°	
S *	=	67.25	
r1 min	=	0.76	
r2	=	3.81	

Collar

H1 *	=	7.87	
H2 1)	=	7.82	

Projectile

G1 1)	=	7.06	
G2	=		
F	=		
L3+G 1)	=	72.61	

Pressures (Energies)
Method Transducer

Pmax	=	4300	bar
PK	=	4945	bar
PE	=	5375	bar
M	=	25.00	
EE	=	3840	Joule

Miscellaneous Dimensions

Fe 1)	=	0.10	
delta L	=	0.14	

CHAMBER MINI

Lengths

L1	=	49.28	
L2	=	54.68	
L3 1)	=	65.02	

Breech

R	=		
R1	=	12.04	
R2	=		
R3	=		
r	=		

Powder Chamber

E	=	3.16	
P1 1)	=	11.99	
P2 *	=	11.24	

Junction Cone

α 1)*	=	34°30'	
S *	=	67.38	
r1 max	=	0.76	
r2	=	3.81	

Collar

H1 *	=	7.89	
H2 1)	=	7.84	

Commencement of Rifling

G1 1)*	=	7.07	
G 1)	=	8.09	
α1 *	=	74°40'12"	
h	=	0.50	
s	=		
i 1)*	=	0°47'33"	
w	=		

Barrel

F 1)*	=	6.86	
Z 1)	=	7.04	

Grooves

b	=	4.06	
N	=	4	
u	=	254.00	
Q	=	38.52	mm²

Dimensions in << mm >>
Dimensions and Tolerances for Proof Barrels
see Appendix CR 1.

Notes: 1) Check for safety reasons
* Basic dimensions